Features and Benefits

- **UltraVac™ •1**
  Permanent vacuum integrity, critical for deep cooling
- **Compact and rugged design**
  Ideal for OEM assembly into highly integrated instruments
- **Peak QE up to 95% @ 780 nm**
  Back illuminated, Deep-Depletion option for the best VIS-NIR detection
- **High resolution 15 and 16 µm pixels**
  Optimized pixel format for high resolution
- **10x lower dark current for Low Dark Current Deep-Depletion, 'LDC-DD' compared with traditional Back-illuminated Deep-Depletion 'BI-DD' sensors**
  Less cooling required to achieve required Signal-to-Noise levels
- **Ultra-low NIR etaloning**
  Front-Illuminated option with 'zero' etaloning. Anti-fringing technology as standard on Back-Illuminated option
- **30 mm wide sensor (LDC-DD)**
  Greater band-pass capture in 1 single shot
- **Single window design**
  Delivers maximum photon throughput
- **Guaranteed air cooling performance**
  -60°C at ambient temperature of up to +25°C
  -50°C at ambient temperature of up to +40°C
  No water cooling required
- **Simple USB 2.0 connection**
  USB plug and play - no controller box
- **Software Development Kit (SDK)**
  Ease of control integration into complex setups, ideal for OEMs: MATLAB, LabVIEW, Visual Basic or C/C++
- **Comprehensive trigger interface**
  Inputs & Outputs: External Trigger, Fire and Shutter TTL readily accessible

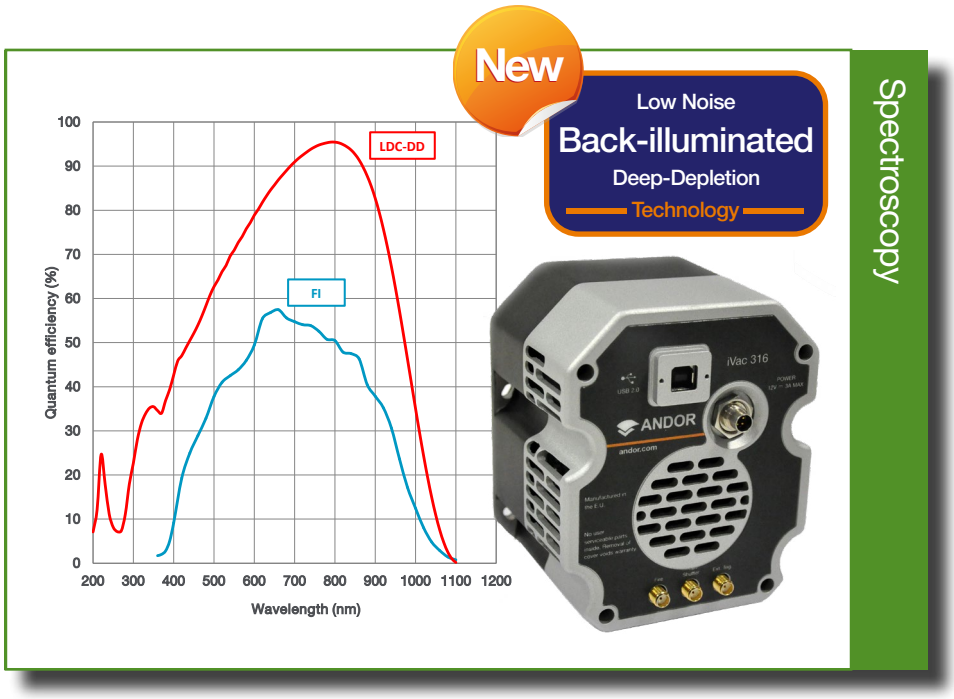

Compact, Research-grade OEM Spectroscopy Camera

Andor's spectroscopy camera designed for OEMs with performance and reliability in mind.

The combination of high NIR sensitivity, high resolution 15 and 16 µm pixel sensor formats and market-leading, maintenance-free Ultravac™ technology for deep cooling & high performance year-after-year provides the optimum platform for a wide range of research benchtop, industrial process control, or spectrally-assisted medical diagnosis instruments.

Specifications Summary

	324 FI	316 LDC-DD
Active pixels (W x H)	1650 x 200	2000 x 256
Pixel size (W x H)	16 x 16 µm	15 x 15 µm
Image area	26.4 x 3.2 mm	30 x 3.8 mm
Active area pixel well depth (typical)	120,000 e^-	150,000 e^-
Output register saturation (typical)	500,000 e^-	300,000 e^-
Maximum spectra per second	267	142
Read noise	As low as 5.8 e^-	As low as 6.0 e^-
Dark current	As low as 0.0028 e^-/ pixel/sec	As low as 0.033 e^-/ pixel/sec

Key Technologies of the iVac Series

1 Ultravac™

Unless protected, cooled sensors will condense moisture, hydrocarbons and other gas contaminants. Exposed to such outgassed contaminants when cooled, the Quantum Efficiency of sensors will decline proportionally.

Andor's Ultravac Technology™ delivers a proven solution.

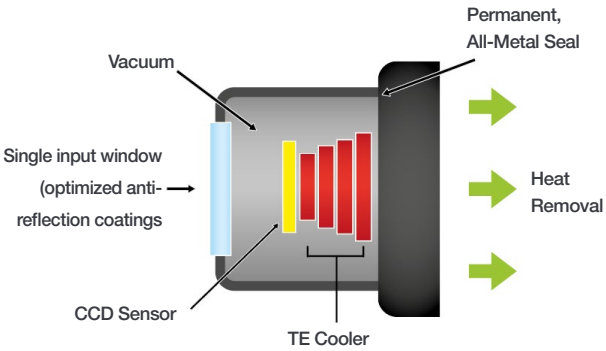

Key Benefits of Ultravac™

Maintenance-free operation in laboratory or in field over extended periods of time, unlike liquid nitrogen LN_2 cooled platforms that require hazardous and regular manual Dewar refills.

Operating temperature of the chip can be reduced significantly. Better cooling with an enhanced thermoelectric (TE) Peltier design translates into substantially lower dark current and fewer blemishes.

No peak QE and sensor cooling performance degradation over many years operation. Andor Ultravac technology offers a MTBF (mean time between failure) of more than 100 years.

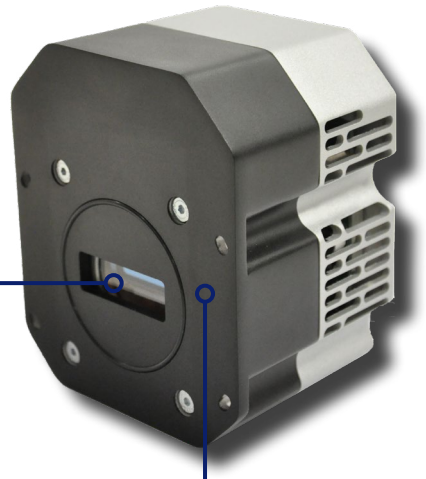

2 Low Dark Current Deep-Depletion' (LDC-DD) sensor technology (iVac 316 LDC-DD)

The '**Low Dark Current Deep-Depletion**' (LDC-DD) technology is harnessed in the iVac 316 to provide a much lower background noise than is possible with traditional '**Back-illuminated Deep-Depletion**' (BI-DD) technology.

Traditional 'BI-DD' Technology Sensor

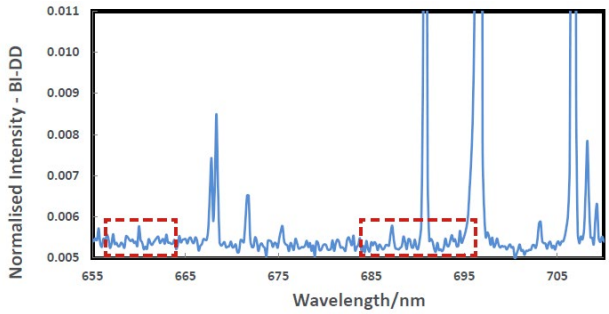

iVac 316 'LDC-DD' Technology Sensor

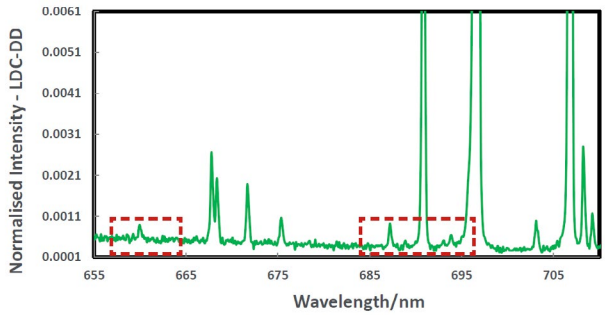

Above: Comparison of 'Low Dark Current Deep-Depletion' (LDC-DD) technology with traditional 'Back-illuminated Deep-Depletion' technology. Spectra taken with exactly the same exposure conditions (500s) and sensor temperature setting. The lower background noise for LDC-DD is evident.

3 Bandpass Improvement

The wider (30 mm) LDC-DD sensor provides an improved bandpass compared to the traditional (26.6 mm) BI-DD sensor.

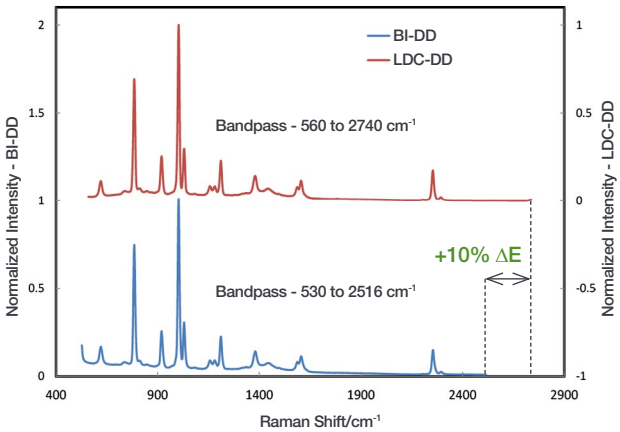

Technical Specifications

System Specifications [•2]

Model	324 FI	316 LDC-DD
Sensor	**FI**: Front-illuminated, red enhanced CCD. Optimized sensor for Near IR applications	**LDC-DD**: Back-illuminated CCD, Deep-Depletion with anti-fringing, low dark current
Active pixels [•3]	1650 x 200	2000 x 256
Pixel size	16 x 16 µm	15 x 15 µm
Image area	26.4 x 3.2 mm	30 x 3.8 mm
Minimum temperature air cooled	-60°C @ +25°C ambient	
Max spectra per second	269 (Full Vertical Bin)	88 (Full Vertical Bin @ VSS 32 µs) 142 (Full Vertical Bin @ VSS 16 µs)[•7]
System window type	UV-grade fused silica, 'Broadband VUV-NIR', unwedged	Fused silica, 'VIS-NIR Enhanced', wedged (AR coated on both sides, optimized at 900 nm) Other broadband UV-NIR options available on request
Digitization	16-bit	
Blemish specifications	Grade 1 sensor from supplier. Camera blemishes as defined by Andor Grade A https://andor.oxinst.com/learning/view/article/ccd-blemishes-and-non-uniformities	

Advanced Performance Specifications

Model	324 FI				316 LDC-DD		
Dark current (e^-/pixel/sec) [•4] @ -50°C @ -60°C	0.018 0.003				0.151 0.033		
Active area pixel well depth	120,000 e^-				150,000 e^-		
Output register saturation [•5]	500,000 e^-				300,000 e^-		
Read noise (e^-) [•6]	35 kHz	130 kHz	400 kHz	1.48 MHz	130 kHz	400 kHz	1.48 MHz
Typical (maximum)	5.8 (10)	7.0 (11)	10.2 (13)	28.0 (32)	6.0 (8)	6.2 (8.5)	13.0 (16)
Sensitivity (e^-/count)	Adjustable from 2.25 - 9.0				Adjustable from 1.5 - 6.0		
Vertical clock speed - VSS (µs)	13				32 and 16[•7]		
Linearity [•8]	Better than 99%						
Power consumption @ -40°C @ -60°C	12.5 W 20 W				9 W 24 W		

Spectral Rates

DR-324B-FI (1650 x 200, 16 µm pixels, Front-illuminated CCD)		Crop mode area width	
		1650 pix.	825 pix.
Crop mode area height	4 pix.	833	1,539
	7 pix.	807	1,449
	14 pix.	752	1,282

DR-316B-LDC-DD (2000 x 256, 15 µm pixels, Back-illuminated CCD)		Crop mode area width			
		2000 pix.	1000 pix.	2000 pix.	1000 pix.
		@ VSS 32 µs		@ VSS 16 µs [•7]	
Crop mode area height	4 pix.	244	290	256	307
	7 pix.	239	282	253	303
	14 pix.	226	265	246	292

Quantum Efficiency Curves [•9]

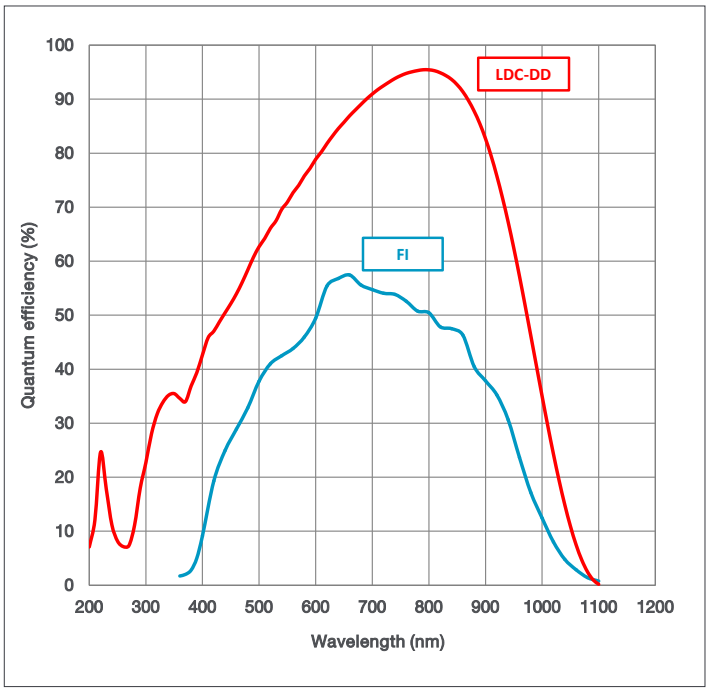

Dark Current [•4]

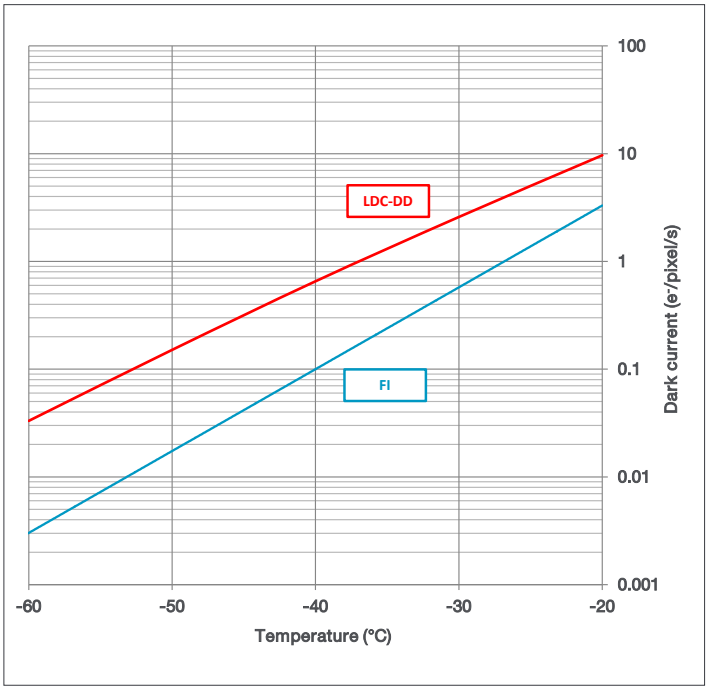

Example of a Custom Setup

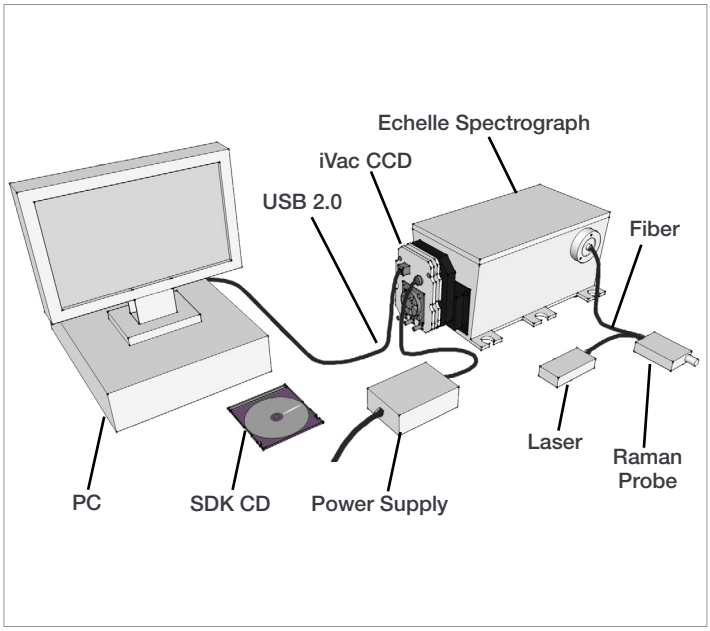

Applications Guide

	324 FI	316 LDC-DD
Raman Spectroscopy (422 - 832 nm laser)	○	●
VIS / NIR Luminescence & Photoluminescence Spectroscopy	○	●
Diffuse Reflectance Spectroscopy	○	●
Broadband Absorption	○	●

○ = Suitable

● = Optimum

Customizable & Flexible

As a truly dedicated OEM platform, the iVac can offer various levels of customization based around the following:

- Electrical connection flexibility
- Optical input configurations, e.g. visible photon filters for X-ray detection
- Heat removal interfaces, e.g. heatsink-less conductive configurations
- Chassis mounting options
- Flexible pricing structure scaleable with volume requirements
- Specific QC / testing
- Camera Window (*see note below)

*To view other window options please refer to the 'Camera Windows Supplementary Specification sheet' which gives the transmission characteristics. Further detailed information on the windows can be found in the Technical note – 'Camera Windows: Optimizing for Different Spectral Regions'. Please discuss your specific requirements with the OEM sales engineer.

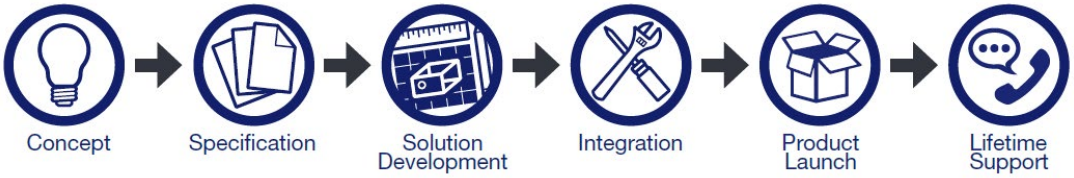

World Class Manufacturing Facilities

With years of academic and industrial experience, Andor's OEM experts specialize in the creation of complete system solutions, from tailored collection optics and spectrographs to software that gives you the levels of control and functionality you require - whether you are creating a brand new analytical device, or incorporating new functionality into an existing configuration.

First in Quality

Andor runs many quality improvement programmes, including some that are focused on its manufacturing process and yield improvement. Operating a quality management system since 1998, the company fully complies with the requirements of BS EN ISO9001:2000

The dedicated OEM partner team

Across the organization we appreciate and understand the critical nature as an OEM supplier and partner. The success of your instrument, brand and customer is directly linked to our ability to consistently supply you with a quality solution that is bespoke to your very specific needs.

Wide array of Solution Capabilities

We have specific resources dedicated to each account and each project. In addition to having a wide range of engineering, manufacturing and commercial resources available to the OEM, we have an ever-expanding breadth of product portfolio.

Have you found what you are looking for?

Need a taller sensor? The iDus 420 series has 26.6 x 6.6 mm format with 1024 x 256 pixels.

Need to work further into the NIR? The iDus InGaAs series offers linear arrays up to 1024 pixels wide with sensitivity to 1.7 or 2.2 µm.

Need a faster or more sensitive CCD? The Newton series offers > 1,500 spectra per second and EM technology for light-starved applications.

Need to work in the UV? The iDus & Newton series offer a range of UV optimized sensors.

Need a customized version? Please contact us to discuss our Customer Special Request options.

The iVac combines seamlessly with Andor's research grade Czerny-Turner and the HoloSpec high throughput spectrographs.

Creating The Optimum Product for You

Step 1. Choose the camera and sensor type

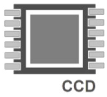

Sensor Type

The iVac comes with 2 sensor option types. Please select the sensor which best suits your needs.

Description	Code
iVac 324: Front-illuminated, red enhanced CCD. Optimized sensor for Near IR applications	DR-324B-FI
iVac 316: Back-illuminated CCD, Deep-Depletion with anti-fringing, low dark current	DR-316B-LDC-DD

Step 2. Select the required accessories and adapters

Accessories & Adapters

The following accessories are available:

Description	Code
+ 12V single line power supply	PS-12
High speed USB 2.0 cable, 3 metre, with fitted ferrite	ASE-01188
SMA to BNC triggering cable, 2 metre	ACC-CABL-BNC020SMA

Spectrograph Compatibility

The iVac is designed for ease of integration with OEM specific products, e.g. process control systems, research bench-top solutions and in-field optical diagnostic equipment.

The iVac also interfaces seamlessly with Andor's Kymera and Shamrock spectrograph (163 - 750 nm focal lengths) family and the HoloSpec high throughput and transmission grating spectrograph. Spectrograph mounting flanges and software control are also available for a wide variety of 3rd party spectrographs including, McPherson, JY/Horiba, PI/Acton, Chromex/Bruker, Oriel/Newport, Photon Design, Dongwoo, Bentham, Solar TII and others.

Step 3. Select the required software

Software

The iVac CCD requires at least one of the following software options:

Solis for Spectroscopy A 32-bit and fully 64-bit enabled application for Windows (7, 8, 8.1 and 10) offering complete functionality for data acquisition and processing. AndorBasic provides macro language control of data acquisition, processing, display and export. Control of Andor Kymera and Shamrock spectrographs and a very wide range of 3rd party spectrographs is also available, see list below.

Andor SDK A software development kit that allows you to control the Andor range of cameras from your own application. Available as 32 and 64-bit libraries for Windows (7, 8, 8.1 and 10) and Linux. Compatible with C/C++, C#, Delphi, VB.NET, LabVIEW and Matlab.

Andor Driver Licence (ANDOR-DRV-LIC) Individual driver licence for Andor detectors & spectrographs. Required for integration into OEM bespoke product lines.

Connecting to the iVac

Power Interface: Connector type – plug: Tyco Electronics Part # 3-1437719-3
Camera Interface: Connector type: USB standard type B
Sync I/O Connectors: Connector type: SMA, Fire, Shutter - Outputs, External Trigger - Input. iVac provided with SMA - BNC cable
Minimum cable clearances required at rear of camera:
- 45 mm (right-angled USB cable)
- 60 mm (standard USB cable)

Learn more about the Andor spectrograph range and accessories at:

www.andor.com/spectrographs

Product Drawings

Dimensions in mm [inches]

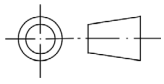

Third-angle projection

iVac 324

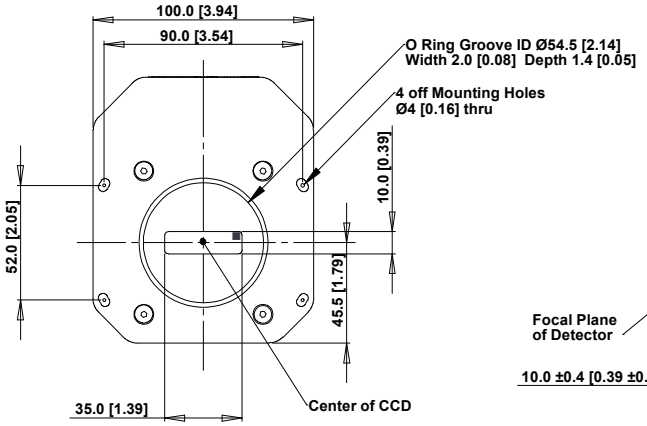

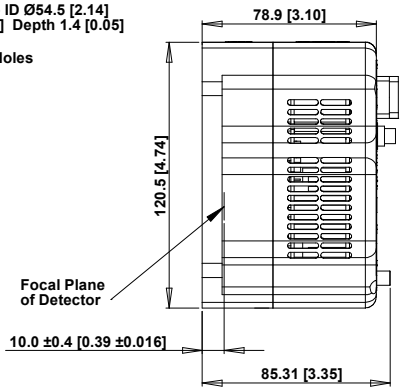

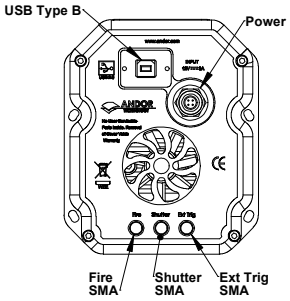

Rear connector panel

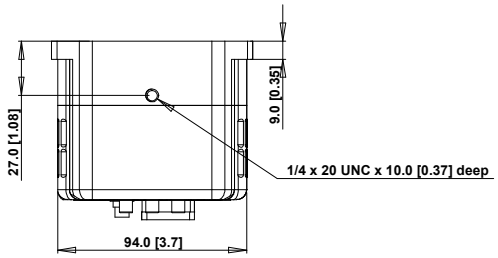

Mounting hole location

iVac 316

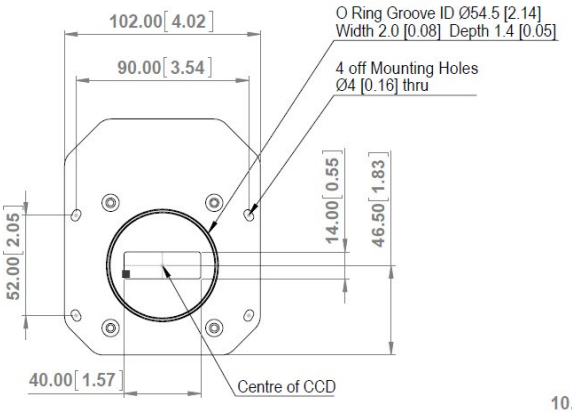

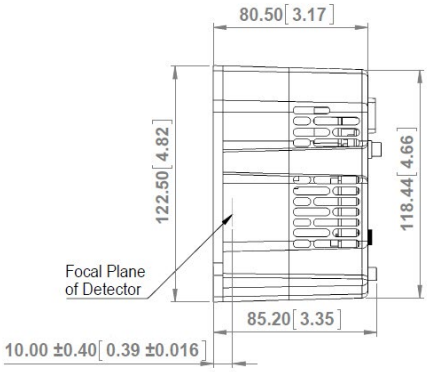

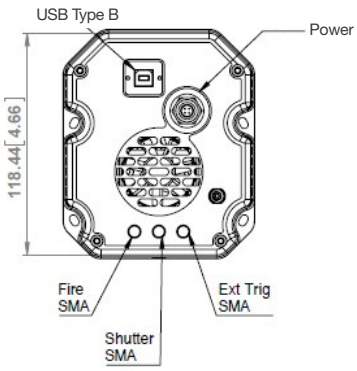

Rear connector panel

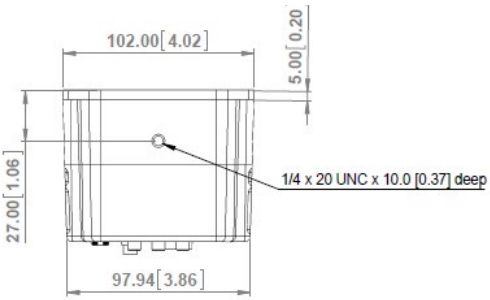

Mounting hole location

■ = position of pixel 1,1

NOTE: To mount this camera to an Andor Kymera or Shamrock spectrograph, 4 off M3 x 10 or 6/32-1/2 UNC cap-head screws are required.

Weight: 1.4 kg [3 lb 13oz]

Order Today

Need more information? At Andor we are committed to finding the correct solution for you. With a dedicated team of technical advisors, we are able to offer you one-to-one guidance and technical support on all Andor products. For a full listing of our local sales offices, please see: andor.oxinst.com/contact

Our regional headquarters are:

Europe
Belfast, Northern Ireland
Phone +44 (28) 9023 7126
Fax +44 (28) 9031 0792

Japan
Tokyo
Phone +81 (3) 6732 8968
Fax +81 (3) 6732 8939

North America
Concord, MA, USA
Phone +1 (860) 290 9211
Fax +1 (860) 290 9566

China
Beijing
Phone +86 (10) 8271 9066
Fax +86 (10) 8271 9055

Items shipped with your camera

1x Camera head unit only
Please refer to Ordering information on page 6 for details of available accessories

Footnotes: Specifications are subject to change without notice

1. Assembled in a state-of-the-art cleanroom facility, Andor's UltraVac™ vacuum process combines a permanent hermetic vacuum seal (no o-rings), with a stringent protocol to minimize outgassing, including use of proprietary materials.
2. Figures are typical unless otherwise stated.
3. Edge pixels may exhibit a partial response.
4. The dark current measurement is averaged over the CCD area excluding any regions with blemishes.
5. The CCD output saturation is dependent upon the sensitivity setting & binning mode selected
6. Readout noise is for the entire system. It is a combination of CCD readout noise and A/D noise. Measurement is for Single Pixel readout with the CCD at a temperature of -60°C and minimum exposure time under dark conditions.
7. A decrease in well depth may occur at this vertical shift speed setting.
8. Linearity is measured from a plot of counts vs exposure time under constant photon flux up to the saturation point of the system.
9. Quantum efficiency of the sensor as supplied by the sensor manufacturer.

Minimum Computer Requirements:

- 3.0 GHz single core or 2.4 GHz multi core processor
- 2 GB RAM
- 100 MB free hard disc to install software (at least 1 GB recommended for data spooling)
- USB 2.0 High Speed Host Controller capable of sustained rate of 40 MB/s
- Windows (7 and 10) or Linux

Operating & Storage Conditions

- Operating Temperature: 0°C to 40°C ambient
- Relative Humidity: < 70% (non-condensing)
- Storage Temperature: -25°C to 50°C

Power Requirements

PS-12: 100 - 240 Vac, 50 - 60 Hz

- Regulation 11.4V minimum, ~ 12.0V typical, ~ 12.6V maximum
- Ripple & Noise: 200 mV maximum

OXFORD INSTRUMENTS
The Business of Science®