CryoCore®
Fully-automated, closed-cycle optical cryostat

Key features

- 4.9 K - 100 K temperature range
- Sample-in-vacuum, cryogen-free operation
- Touchscreen system controller
- Push button cooling
- Remote operation and monitoring
- 5 optical access ports
- 12 DC lines to sample
- 2 RF coax lines to sample

The CryoCore® is a standardized, turn-key member of the Cryostation® product line designed to accelerate quantum research and jump-start hands-on quantum education. The single as-sold configuration is built for investigators who need the versatility of a Montana Instruments Cryostation® in a package that fits their budget and project timeline.

The system truly is "plug-and-play" with preconfigured, off-table cooling technology, plumbing, and electronics. CryoCore®'s flexibility and ease of use provide a stable, accessible platform enabling any investigator to reliably start an experiment and quickly achieve meaningful results.

- Lower cost per data point
- Unobstructed sample & optical access
- Fully automated temperature & vacuum control
- Versatile & flexible tabletop mounting with nexternal support structures
- World-class customer support

Quantum Design EUROPE

Quantum Design GmbH
Breitwieserweg 9
D-64319 Pfungstadt
www.qd-europe.com

David Appel: ✆ +49 6157 80710-499,
appel@qd-europe.com
Dr. Tobias Adler: ✆ +49 6157 80710-479,
adler@qd-europe.com

MONTANA INSTRUMENTS

CryoCore®
Fully-automated, closed-cycle optical cryostat

Housing & chamber, assembled

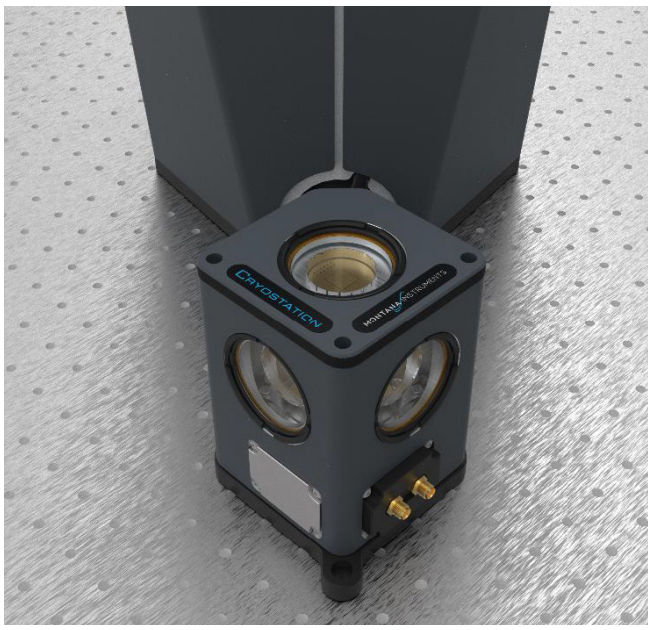

- Includes 2x 5.0 GHz RF I/O
- Includes 20x available DC channels

Housing & chamber, detail

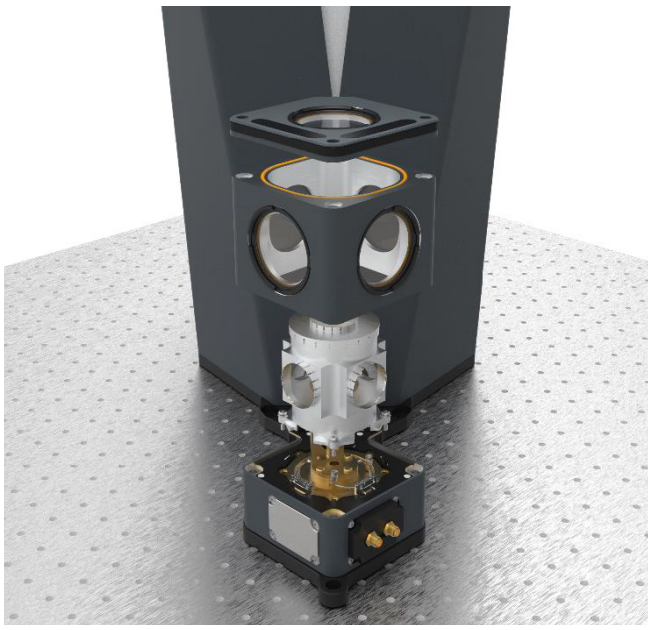

- Lift-off housing simplifies sample access and maximizes ease-of-use

Sample chamber

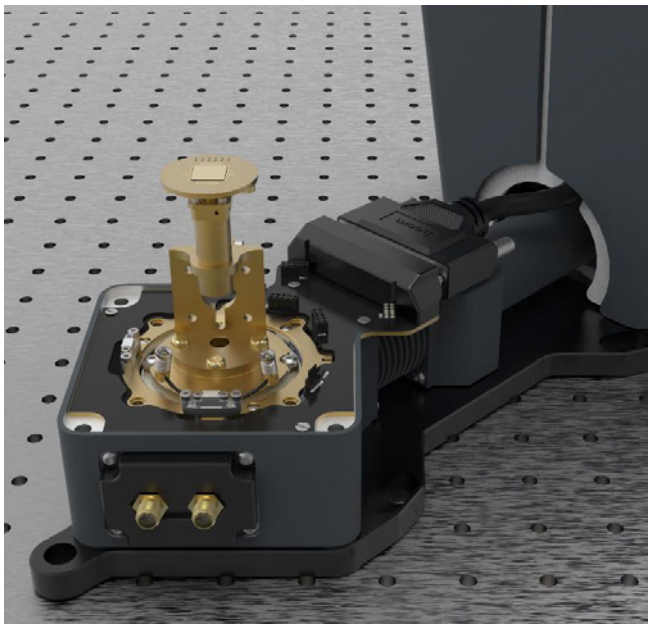

- Reusable sample mount PCB with 12x DC & 2x RF connections
- Replaceable sample mount for fast sample exchange

Touch screen user interface

- Galaxy software suite for comprehensive & intuitive equipment control
- On-board user-documentation with scripting examples

Quantum Design EUROPE

Quantum Design GmbH
Breitwieserweg 9
D-64319 Pfungstadt
www.qd-europe.com

David Appel: ✆ +49 6157 80710-499,
appel@qd-europe.com
Dr. Tobias Adler: ✆ +49 6157 80710-479,
adler@qd-europe.com

MONTANA INSTRUMENTS

CryoCore®
Fully-automated, closed-cycle optical cryostat

Specifications	
Performance Specifications	
Temperature Range	<4.9 K - 100 K
Temperature Stability	<100 mK
Vibrational Stability	<50 nm ptp
Cool Down Time	~3.5 hours to 6 K
Cooling Power	100 mW @ 6 K
Sample Chamber	
Platform Style	Circular mounting plate w/ 1-inch M3 bolt pattern
Positioning	Manually adjustable damped positioner
Temperature Sensors	1 platform + 1 sample sensor
Low-Frequency	12 DC lines to sample mount
High-Frequency	2 RF flexible coax lines to sample mount (rated for 5 Ghz)
Electrical Sample Mount	6 mm square mounting plate plus circuit board surround with 12 DC electrical contact pads and 2 RF coax SMP connections
Thermal Lagging	Two 30K lagging points
Sample Platform	
Sample Environment	Sample in Vacuum
Dimensions	53mm x 63mm height (inside radiation shield)
Beam Height	89.9 mm from table
Sample Access	Lift off outer vacuum shroud and inner radiation shield
Vibration Damping	Proprietary damper technology and internal support structure
Optical Ports	5x 50 mm vacuum windows (4 radial + 1 top) with corresponding 30 mm
internal "cold windows" on radiation shield	
Window Material	AR-coated Fused Silica; user-replaceable
Acceptable Angle	60° full angle (sample at center of chamber)
Working Distance	>14.5 mm on horizontal axes; >8.8 mm on vertical axis
Low Working Distance	(Optional) Provides working distance >3.0 mm in vertical axis
Control Technology	
User Interface	Touchscreen with MI's Galaxy software;
Remote Control	Remote operation via VNC. Programmatic control using REST API
Vacuum Control Module	Integrated roughing pump and valves, 6U 19-inch rack unit
System Control Module	Integrated system control electronics, 4U 19-inch rack unit
Power and Water Requirements	
Water Inlet Temperature	4 °C - 27 °C (40° - 80 °F)
Cooling Water Pressure	210 kPa (30 psig) - 690 kPa (100 psig) [Min-Max]
Line Voltage	100-240 VAC (region specific)
Frequency	50 Hz or 60 Hz (region specific)

Quantum Design EUROPE

Quantum Design GmbH
Breitwieserweg 9
D-64319 Pfungstadt
www.qd-europe.com

David Appel: ✆ +49 6157 80710-499,
appel@qd-europe.com
Dr. Tobias Adler: ✆ +49 6157 80710-479,
adler@qd-europe.com

MONTANA INSTRUMENTS

CryoCore®
Fully-automated, closed-cycle optical cryostat

Dimensions

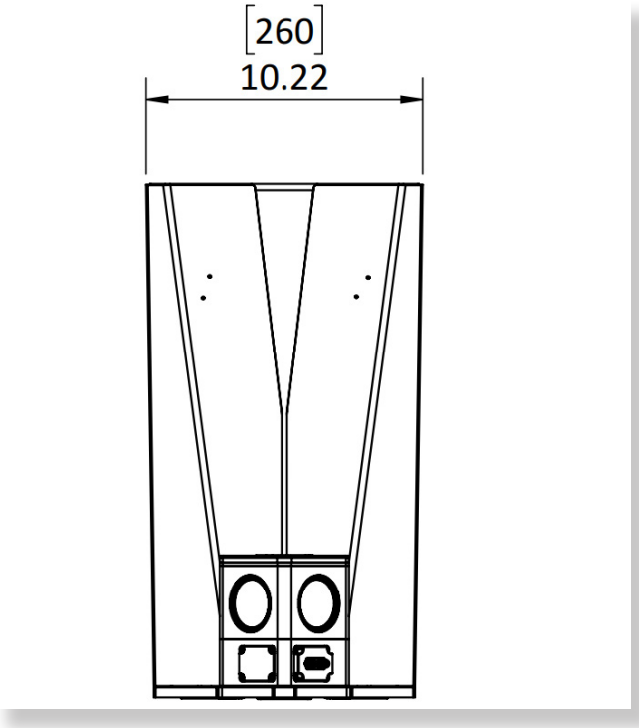

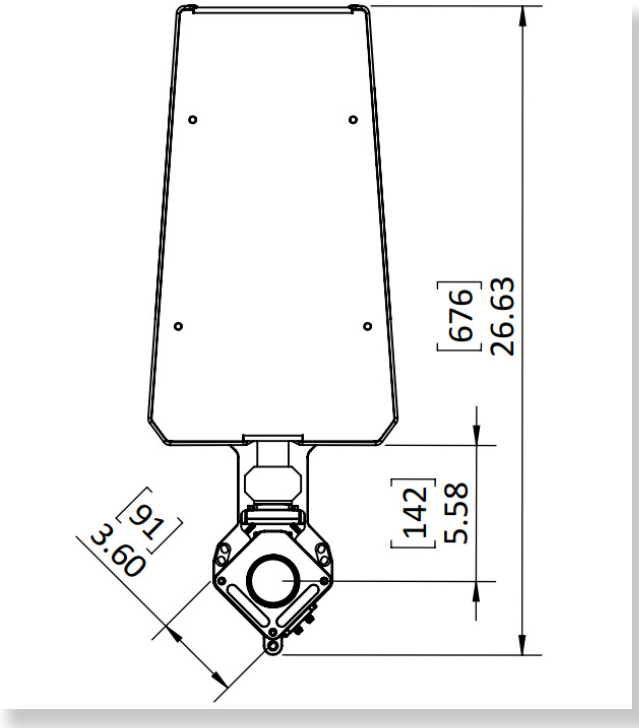

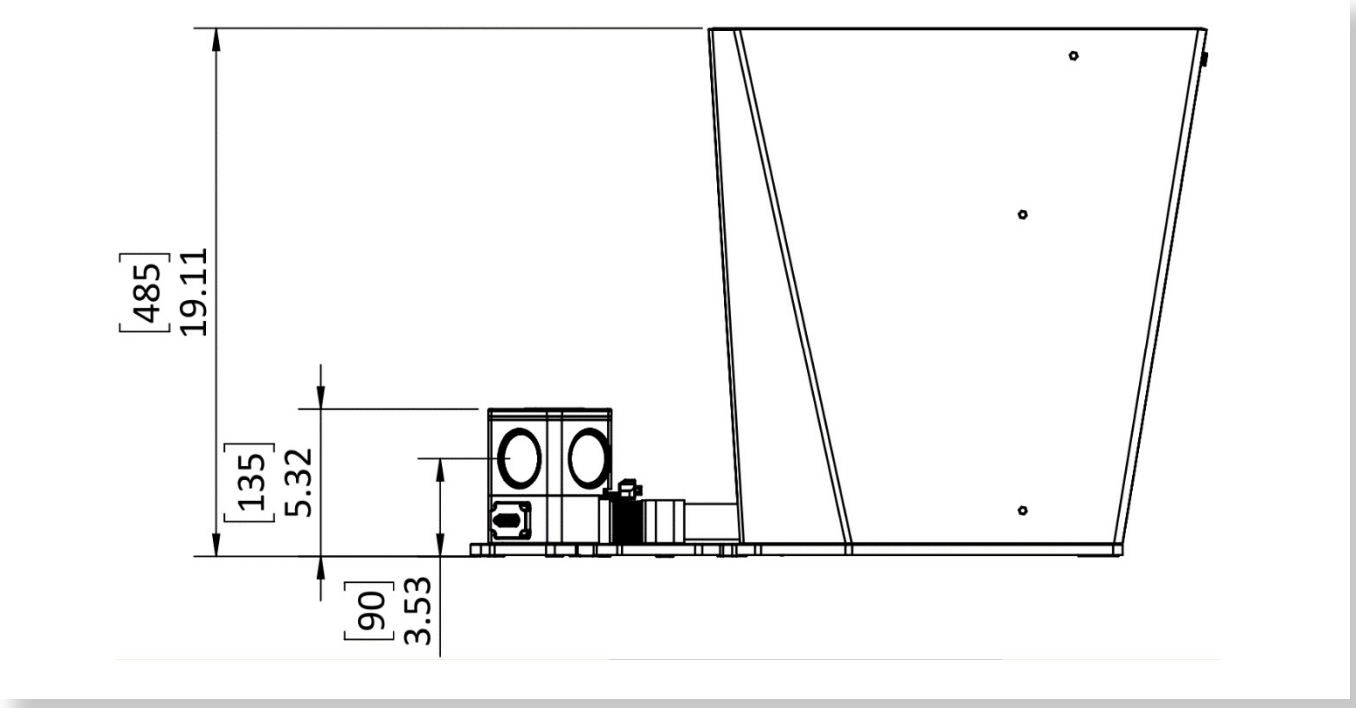

Quantum Design EUROPE

Quantum Design GmbH
Breitwieserweg 9
D-64319 Pfungstadt
www.qd-europe.com

David Appel: ✆ +49 6157 80710-499,
appel@qd-europe.com
Dr. Tobias Adler: ✆ +49 6157 80710-479,
adler@qd-europe.com

MONTANA INSTRUMENTS