Large core optical quartz fibers

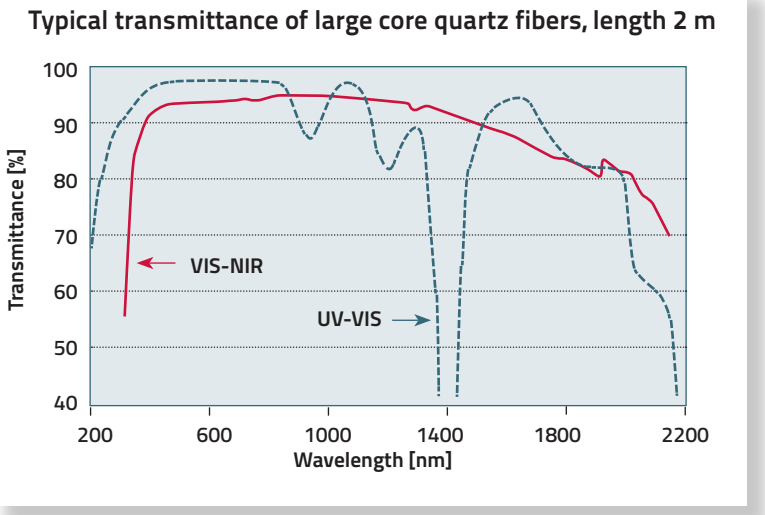

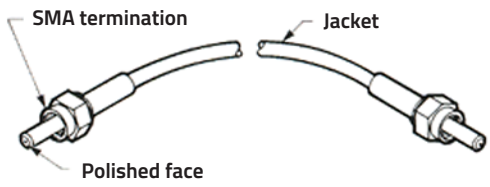

Large core quartz fiber geometry

- Small diameter
- Transmittance of 200 nm - 2 µm

As opposed to fiber bundles, large core quartz fibers are single fibers with a core diameter of 100 µm - 1 mm. The great advantage of large core quartz fibers compared to fiber bundles is the high and continuous transmittance of 200 - 2000 nm even with long distance applications. These large core quartz fibers are particularily useful for coupling to smaller light sources such as 50 - 150 W arc lamps or for coupling light to the input of monochromators.

We offer three different types:

- UV-VIS for 200 - 2000 nm
- VIS-NIR for 500 - 2000 nm with a water free silica core
- UV-VIS solarization resistant for applications below 260 nm.

UV radiation below 260 nm causes "solarization" of fused silica (quartz). High energy UV photons generate defects in the glass, which reduce transmittance particularly in the UV. Fibers do not transmit below 260 nm after a prolonged exposure to UV-radiation.

A special production process helps reduce this effect for a certain period of time. Our solarization-resistant fibers can withstand these damaging effects for periods of up to 18 months.

All fibers come with SMA terminations on both ends in a protective metal spiral tube with glass cladding and a silicone jacket. The highly flexible hose offers great protection against bending, traction and torsion.

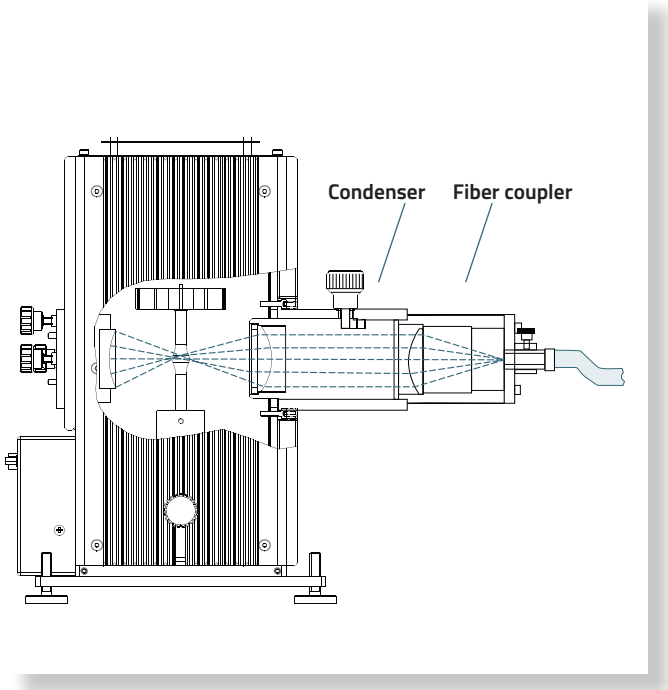

Operation principle of light source with coupled fiber

Quantum Design EUROPE
Quantum Design GmbH
Im Tiefen See 58
D-64293 Darmstadt
Jörg Tobisch : +49 6151 8806 50
tobisch@qd-europe.com
Find your local contact at www.qd-europe.com

Large core optical quartz fibers

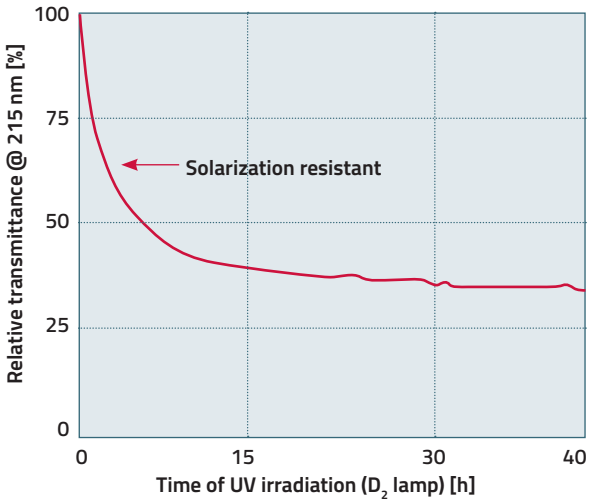

11 mm adapter LLZ002

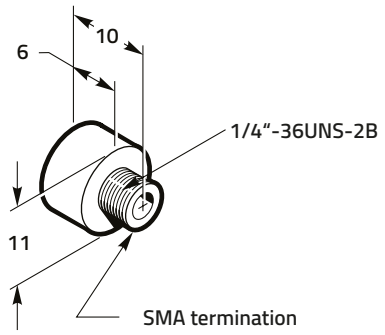

Dimensions [mm]

Ordering information UV-VIS fibers, 200 - 1200; 1500 - 1800 nm								
Part number	Core Ø [µm]	Cladding [µm]	Length [m]	NA@587 nm	Acceptance cone [°]	Bend radius min. [mm]	Add. length* /m	11 mm adapter
LLS050	50	125	1	0.22	25	40	LLS106ML	LLZ002
LLS101	100	110	1	0.22	25	40	LLS106ML	
LLS102	200	220	1	0.22	25	50	LLS106ML	
LLS104	400	440	1	0.22	25	100	LLS106ML	
LLS106	600	660	1	0.22	25	150	LLS106ML	
LLS108	800	880	1	0.22	25	200	LLS110ML	
LLS110	1000	1100	1	0.22	25	250	LLS110ML	

Ordering information VIS-NIR fibers, 400 – 2000 nm								
Part number	Core Ø [µm]	Cladding [µm]	Length [m]	NA@587 nm	Acceptance cone [°]	Bend radius min. [mm]	Add. length* /m	11 mm adapter
LLS201	100	120	1	0.22	25	40	LLS106ML	LLZ002
LLS202	200	240	1	0.22	25	50	LLS206ML	
LLS204	400	480	1	0.22	25	100	LLS206ML	
LLS206	600	720	1	0.22	25	150	LLS206ML	
LLS208	800	960	1	0.22	25	200	LLS210ML	
LLS210	1000	1200	1	0.22	25	250	LLS210ML	

Ordering information Solarization resistant fibers, 200 - 1200 nm; 1500 - 1800 nm								
Part number	Core Ø [µm]	Cladding [µm]	Length [m]	NA@587 nm	Acceptance cone [°]	Bend radius min. [mm]	Add. length* /m	11 mm adapter
LLS306	600	660	1	0.22	25	150	LLS306ML	LLZ002
LLS308	800	880	1	0.22	25	200	LLS310ML	
LLS310	1000	1100	1	0.22	25	250	LLS310ML	

* Please state additional length (available up to several 10 m length)

Quantum Design EUROPE

Quantum Design GmbH
Im Tiefen See 58
D-64293 Darmstadt

Jörg Tobisch : +49 6151 8806 50
tobisch@qd-europe.com
Find your local contact at www.qd-europe.com